REVISIONS				
LTR	DESCRIPTION	E.C.N.	DATE	BY/APP'D
A	RELEASE TO DOCUMENT CONTROL	09537	02/26/93	TL/HJK
B	ROTATE TOP VIEW 90°: REVISE NOTE 4, TITLE & DETAIL A	09957	09/09/93	TL/HJK
C	REVISE NOTE 1 & 4;PKG CORNERS WERE ROUND.	10149	12/01/93	DEG/HJK
D	HIDE BOT PKG BODY AT EA LD WIDTH: ADD "PIN #1 IDENT" CALLOUT TO TOP VIEW; REV BLK: REV C:... "ROUND" WAS "SHARP".	10239	01/27/94	MS/

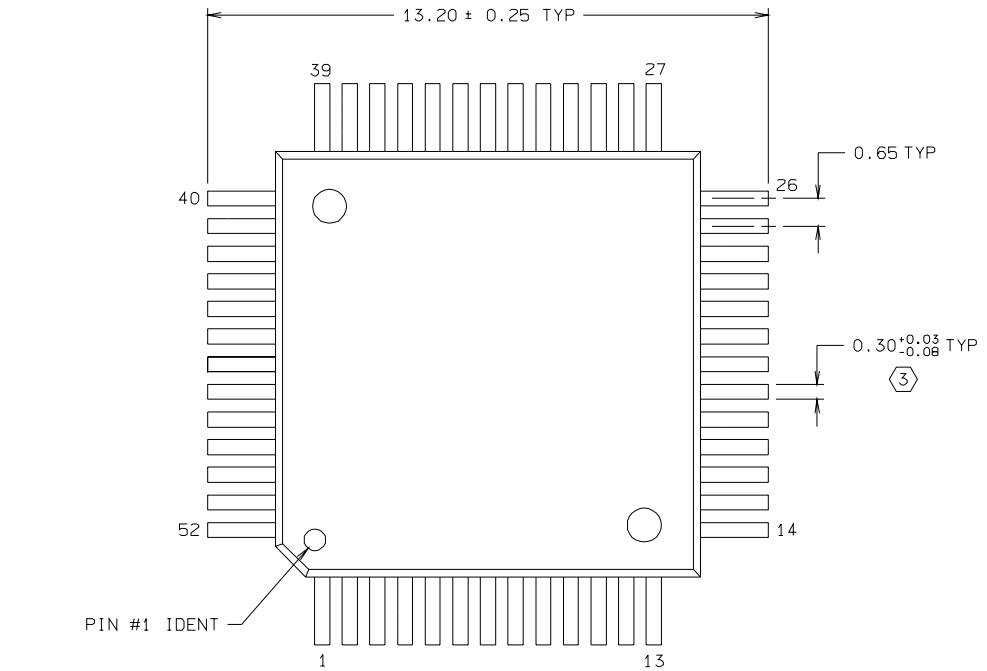

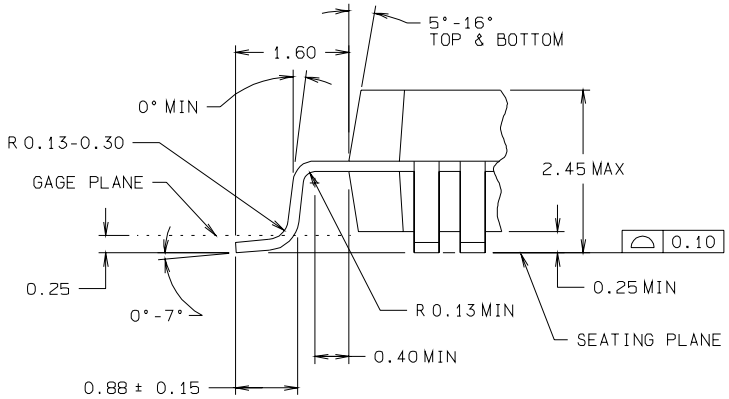

DETAIL A
TYPICAL

DIMENSIONS ARE IN MILLIMETERS

NOTES: UNLESS OTHERWISE SPECIFIED

1. STANDARD LEAD FINISH:
   7.62 MICROMETERS MINIMUM SOLDER PLATING (80/20) THICKNESS ON ALLOY 42 / COPPER.

2. DIMENSION DOES NOT INCLUDE MOLD PROTRUSION.
   MAXIMUM ALLOWABLE MOLD PROTRUSION 0.25 mm PER SIDE.

3. DIMENSION DOES NOT INCLUDE DAMBAR PROTRUSION.
   ALLOWABLE DAMBAR PROTRUSION SHALL BE 0.15.

4. REFERENCE JEDEC METRIC REGISTRATION MO-108, VARIATION AC-1, DATED 10/90;

APPROVALS	DATE
DRAWN T. LEQUANG	02/26/93
DFTG. CHK.	
ENGR. CHK.	
APPROVAL	

NATIONAL SEMICONDUCTOR CORPORATION
2900 Semiconductor Drive, Santa Clara, CA 95052-8090

PQFP, JEDEC METRIC, (S), 10 X 10 X 2.0 mm, 52 LEAD

PROJECTION INCH [MM]

SCALE	SIZE	DRAWING NUMBER	REV
N/A	C	MKT-VGB52A	D

DO NOT SCALE DRAWING — SHEET 1 OF 1